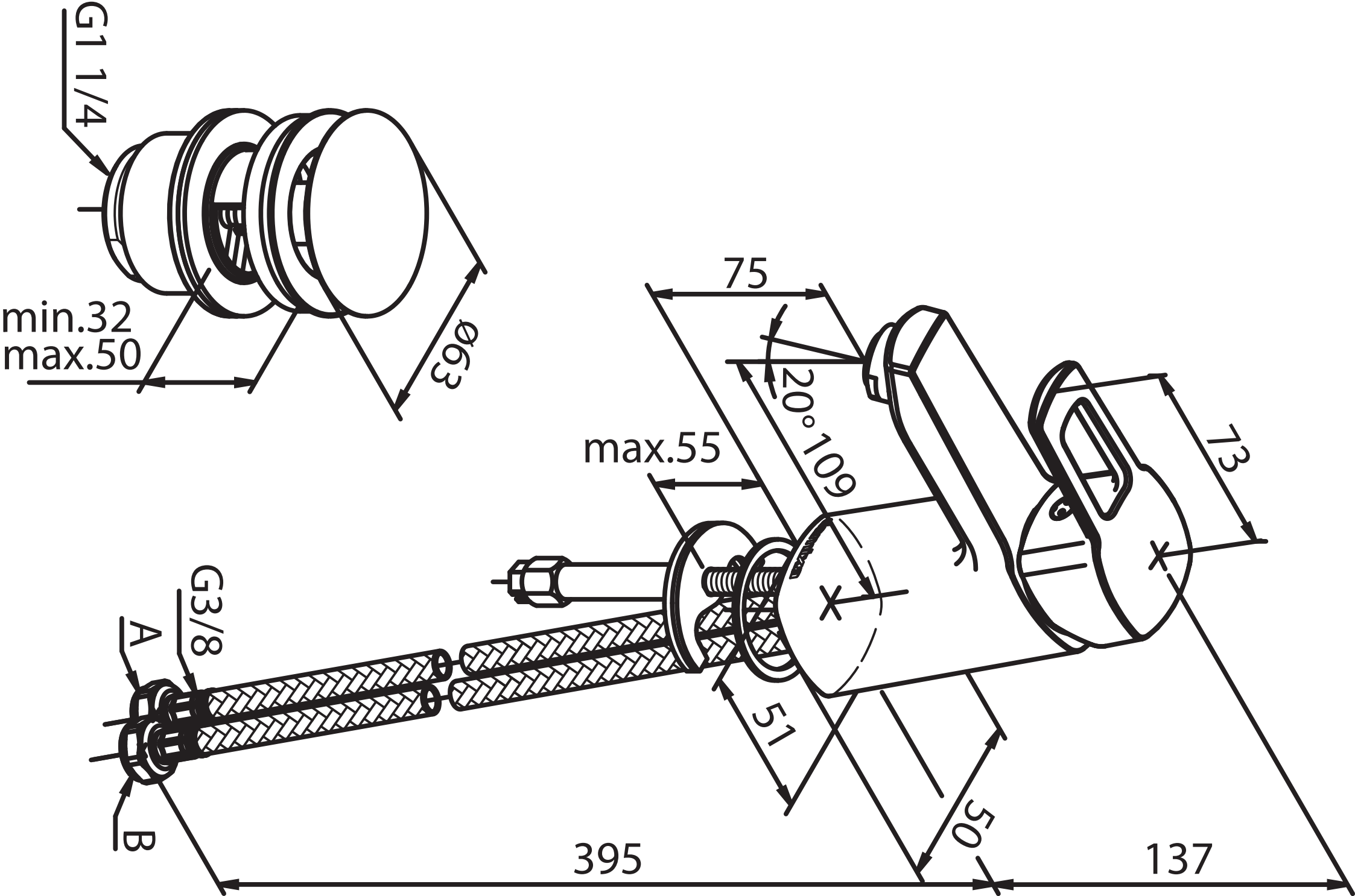
G1 1/4
min.32
max.50
Ø63
75
20°
109
max.55
73
G3/8
A
B
51
50
395
137