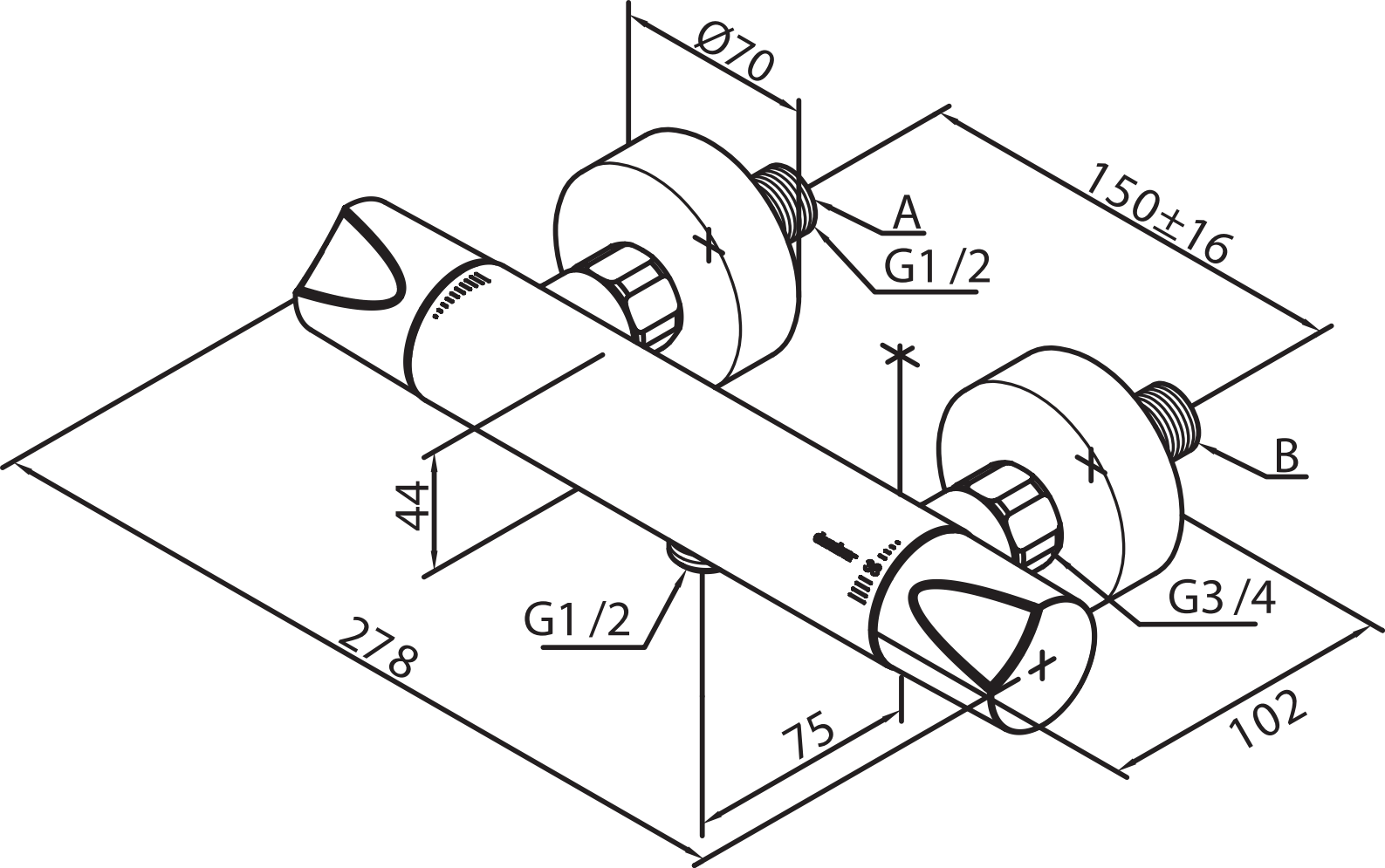
Ø70
150±16
A
G1 /2
B
44
G1 /2
G3 /4
278
75
102