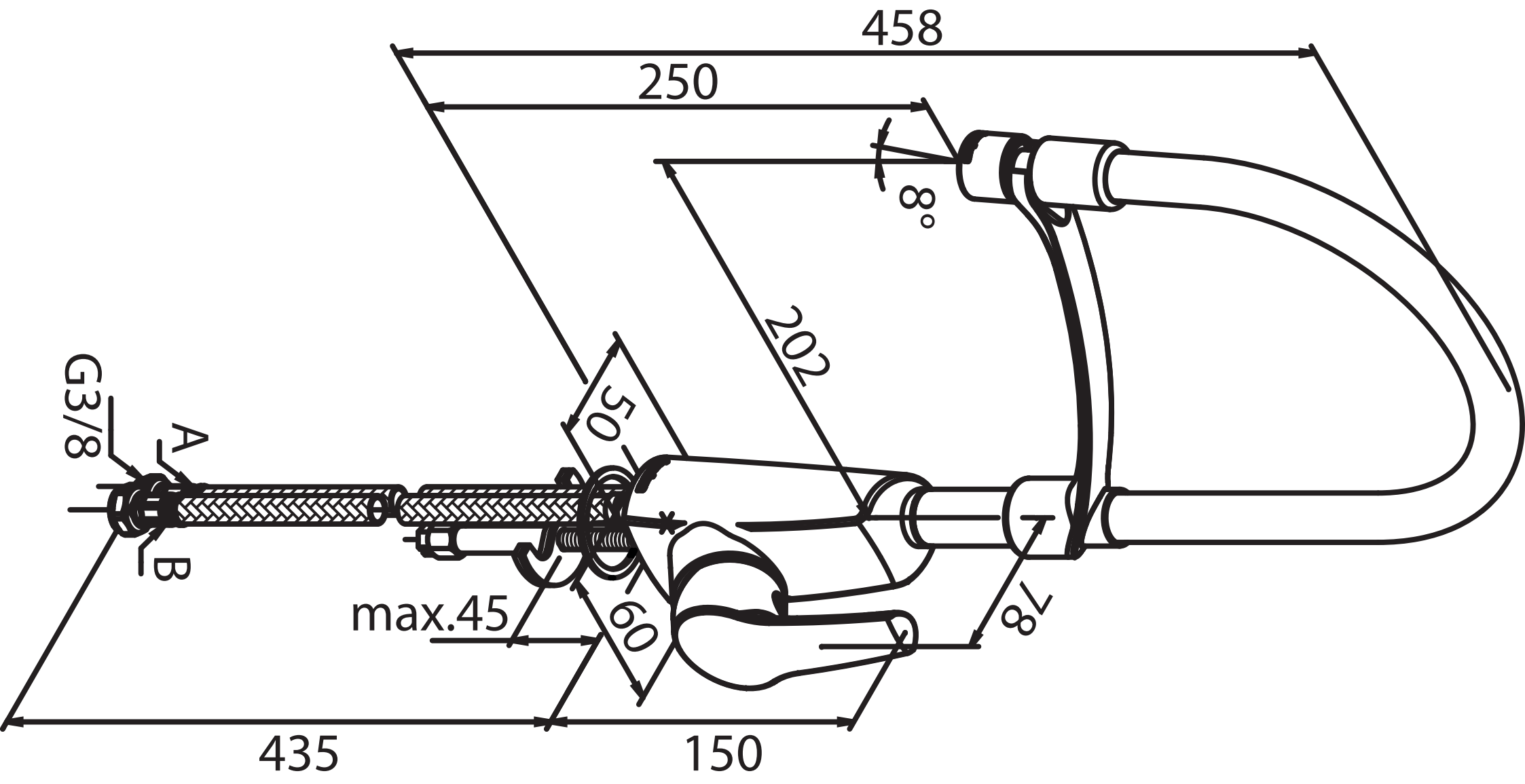
458
250
8°
202
50
G3/8
A
B
max.45
60
78
435
150