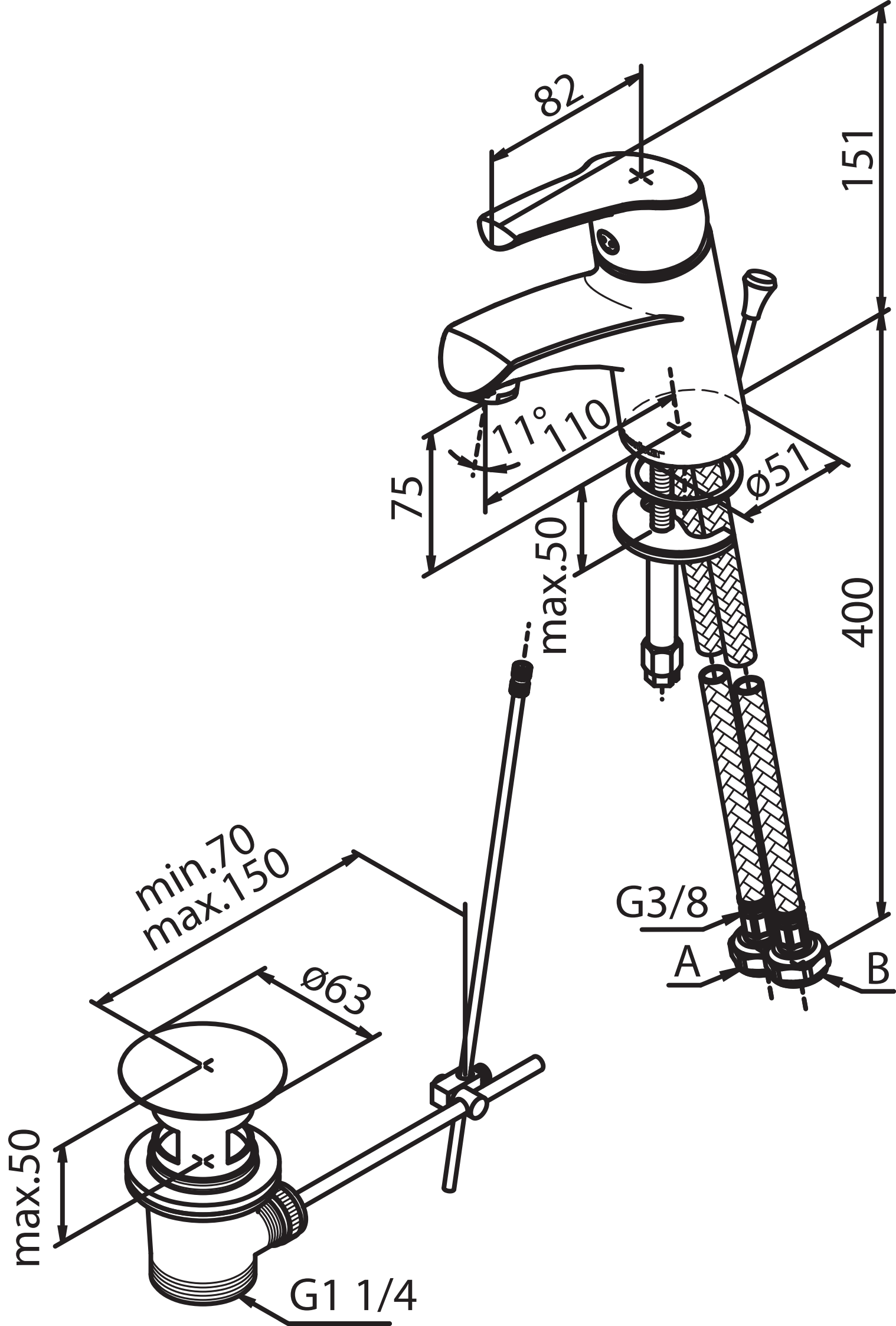
82
151
11°
110
75
ø51
max.50
400
min.70
max.150
G3/8
A
B
ø63
max.50
G1 1/4