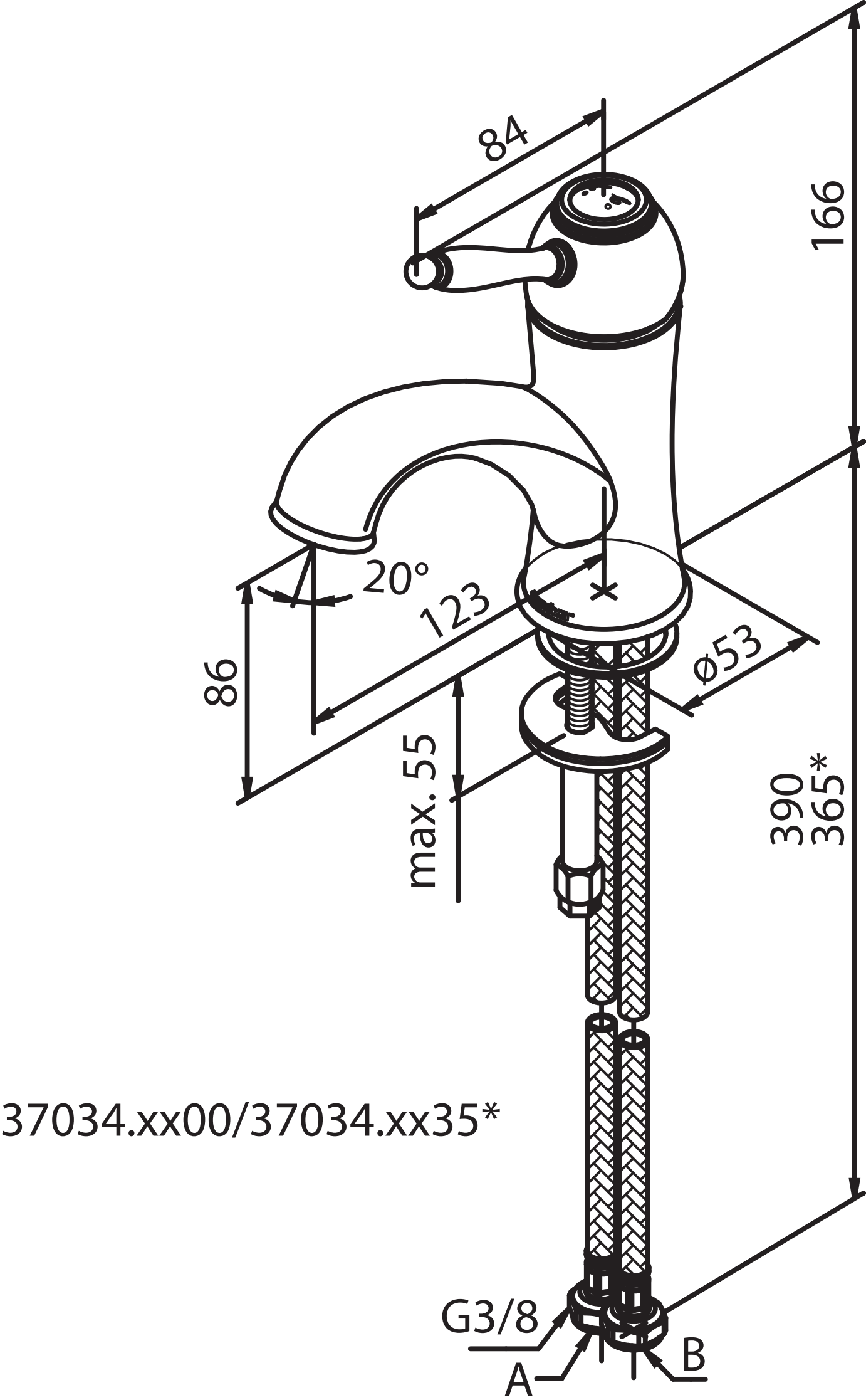

37034.xx00/37034.xx35*